non-indicative weld dim.	non-indicative edge part	General tolerances (KSB ISO 2768-1)								
		machining of metals	division	0.5 ~ 6	6 ~ 30	30 ~ 120	120 ~ 400	400 ~1000	1000 ~2000	2000 ~4000
a	C = 0.3~0.8 R = 0.3~0.8		mid-range	± 0.1	± 0.2	± 0.3	± 0.5	± 0.8	± 1.2	± 2.0

Surface roughness											
Ra	✓	0.1 ▽	0.2 ▽	0.4 ▽	0.8 ▽	1.6 ▽	3.2 ▽	6.3 ▽	12.5 ▽	25 ▽
Rmax		0.4S	0.8S	1.6S	3.2S	6.3S	12.5S	25S	50S	100S
finishing	~	▽▽▽▽		▽▽▽			▽▽		▽	

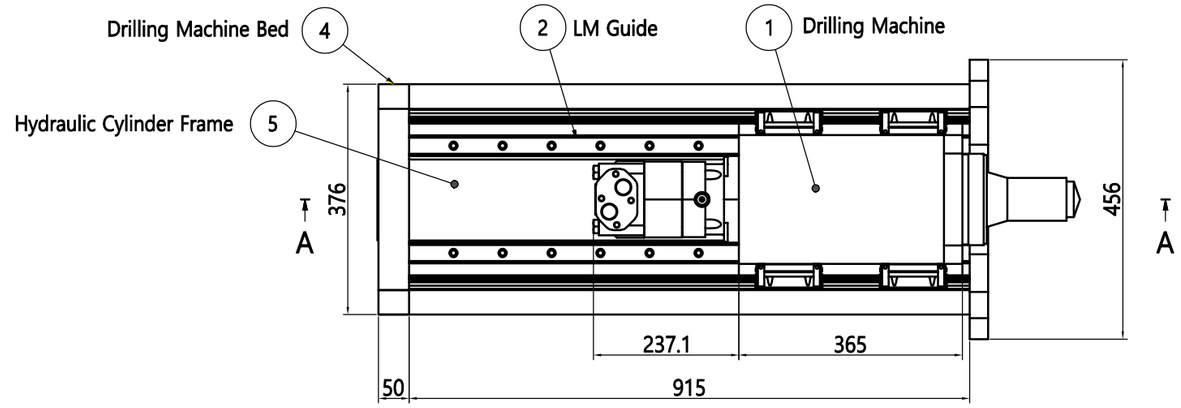

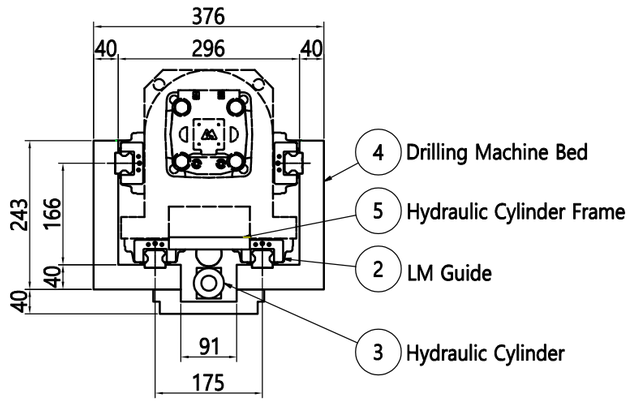

단면 B-B

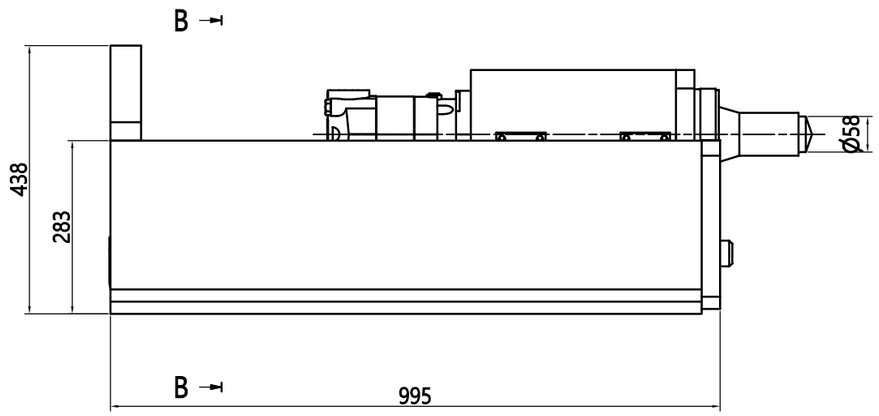

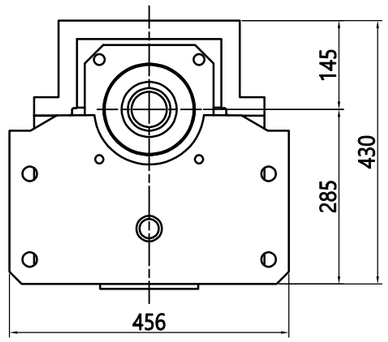

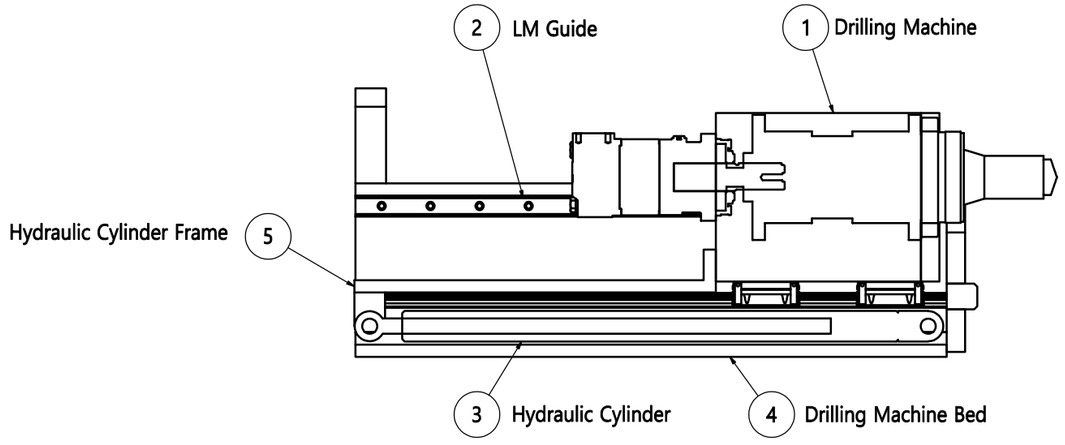

단면 A-A

NO.	DESCRIPTION	MAT'(KS)	UNIT QUANTITY	TOTAL QUANTITY	PER UNIT WEIGHT(KG)	TOTAL WEIGHT(KG)	REMARK'S
1	Drilling Machine		1				
2	HSR35A2SS-965L		4				
3	Hydraulic Cylinder		1				
4	Drilling Machine Bed		1				
5	Hydraulic Cylinder Frame		1				

FM GLOBAL CONSTRUCTION EQUIPMENT MACHINERY CO., LTD. (Model : F600-DM01)

SCALE | SIZE | PROJECTION | DIMENSION mm

TITLE: Drilling Machine Ass'y

PLANT | FACILITY

	DRAWN	CHECKED	REVIEWED	APPROVED		DRAWN	CHECKED	REVIEWED	APPROVED
FIRST					SUPPLIER				
SIGNATURE									
DATE									

A1(841x594)

non-indicative weld dim.	non-indicative edge part	General tolerances (KSB ISO 2768-1)								
	C = 0.3~0.8 R = 0.3~0.8	machining of metals	division	0.5 ~ 6	6 ~ 30	30 ~ 120	120 ~ 400	400 ~1000	1000 ~2000	2000 ~4000
			mid-range	± 0.1	± 0.2	± 0.3	± 0.5	± 0.8	± 1.2	± 2.0

Surface roughness											
Ra	✓	0.1 ▽	0.2 ▽	0.4 ▽	0.8 ▽	1.6 ▽	3.2 ▽	6.3 ▽	12.5 ▽	25 ▽	
Rmax		0.4S	0.8S	1.6S	3.2S	6.3S	12.5S	25S	50S	100S	
finishing	~	▽▽▽▽		▽▽▽			▽▽		▽		

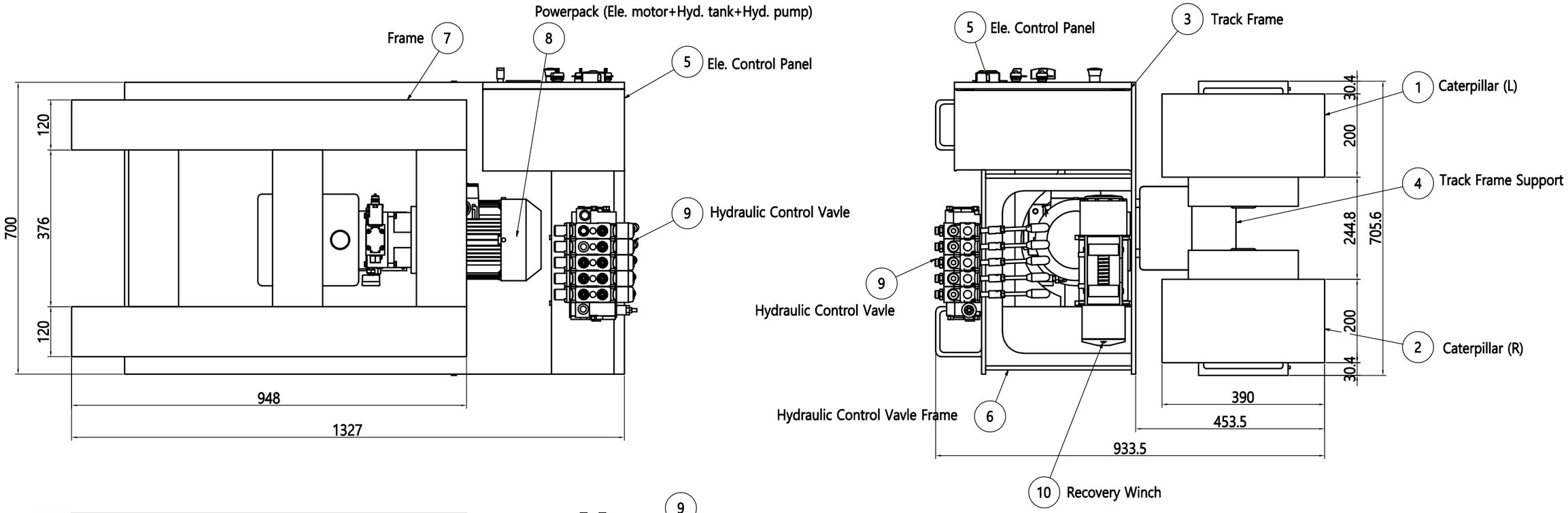

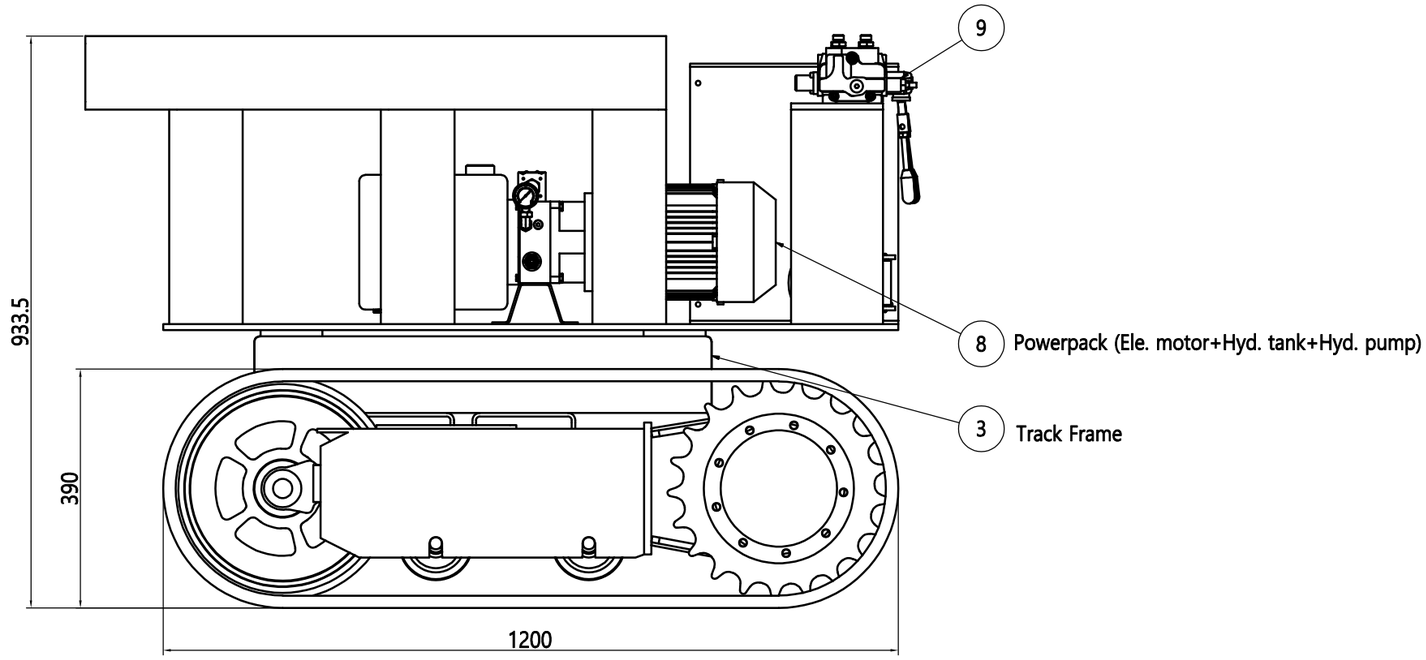

NO.	DESCRIPTION	MAT'(KS)	UNIT QUANTITY	TOTAL QUANTITY	PER UNIT WEIGHT(KG)	TOTAL WEIGHT(KG)		REMARK'S
1	Caterpillar (L)		1					
2	Caterpillar (R)		1					
3	Track Frame		1					
4	Track Frame Support		2					
5	Ele. Control Panel		1					
6	Hydraulic Control Vavle Frame		1					
7	Frame		1					
8	Powerpack (Hyd. motor+Hyd. tank+Hyd. pump)		1					
9	Hydraulic Control Vavle		1					
10	Recovery Winch		1					

FMD GLOBAL CONSTRUCTION EQUIPMENT MACHINERY CO., LTD. (Model : F600-HM01)

SCALE | SIZE | PROJECTION | DIMENSION mm

TITLE: PLANT / FACILITY — Hydraulic System & Moving Equipment

	DRAWN	CHECKED	REVIEWED	APPROVED		DRAWN	CHECKED	REVIEWED	APPROVED
FIRED					SUPPLIER				
SIGNATURE									
DATE									

A1(841x594)

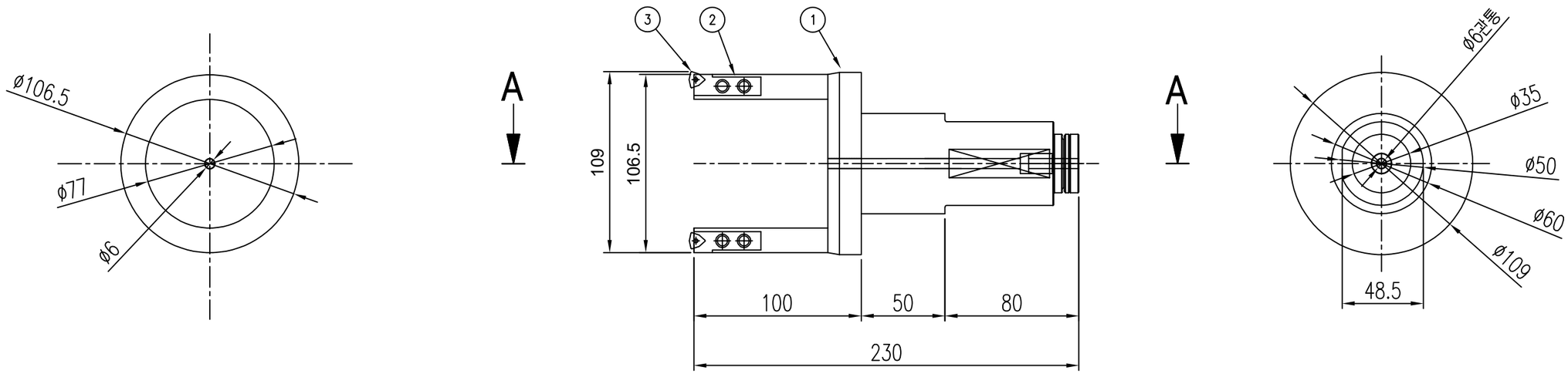

<주기>
1. 조립 후 찍힘 등 유해한 흠이 없을것.
2. ( )안의 치수는 참고 치수임

NO.	PARTS NAME	SIZE	MATERIAL	Q'TY	WT(KG)	REMARKS
3	TIP	12.2x11.7x4t		2		FM21-F600-DM01-TD3
2	CARTRIDGE	10x12.5x40L		2		FM21-F600-DM01-TD2
1	TREPANNING DRILL	ø109x215L		1		FM21-F600-DM01-TD1

WORK NO.	PROJECT: POSCO		SCALE: 1/2
REF. NO.	TITLE: DRILLING MACHINE ASSEMBLY / TREPANNING DRILL ASS'Y		PROJECTION: 3RD
DRAWN: S.D.KIM	CHECKED	APPROVED	DRAWING NO.: FM21-F600-DM01-TD
20.10.10			REV.: 0

에프엠글로벌(주) / FM GLOBAL CONSTRUCTION EQUIPMENT MACHINERY CO., LTD.

A2 : 594x420

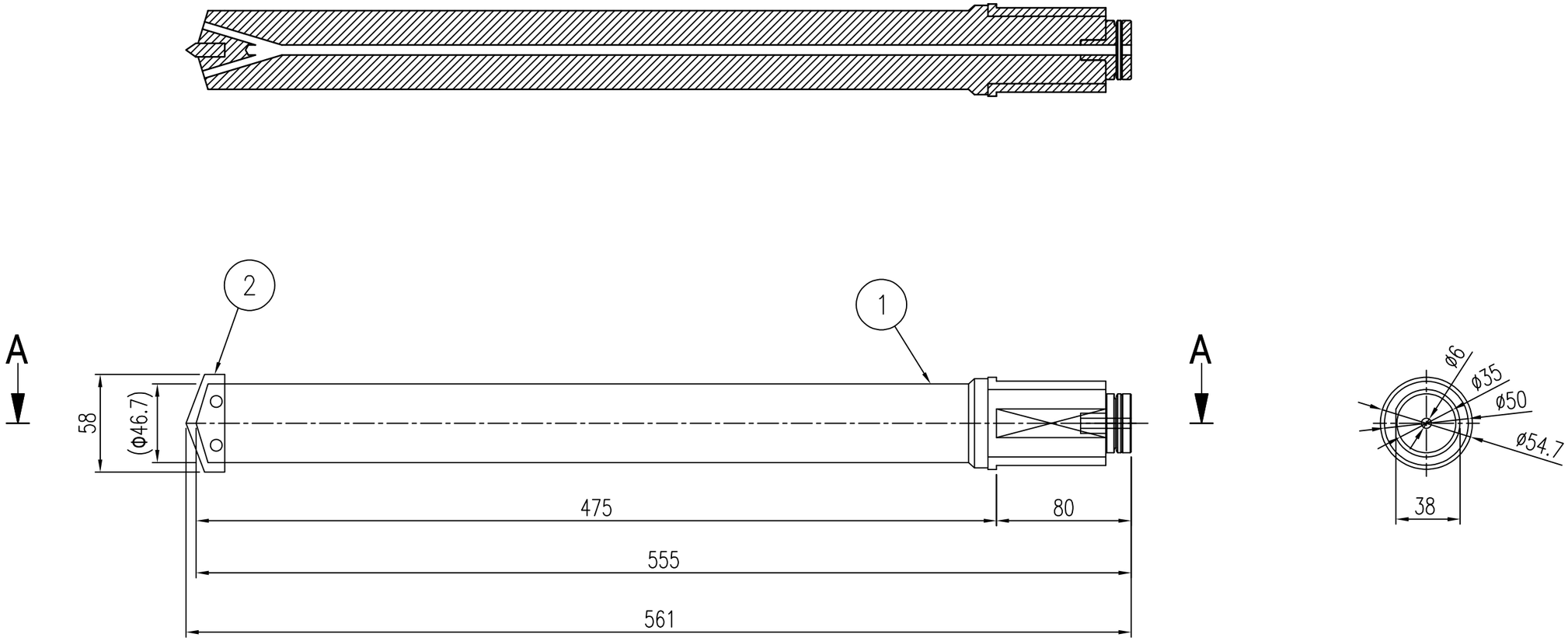

<주기>
1. 조립 후 찍힘 등 유해한 흠이 없을것.
2. ( )안의 치수는 참고 치수임

NO.	PARTS NAME	SIZE	MATERIAL	Q'TY	WT(KG)	REMARKS
2	SPADE INSERT TIP	8Tx23.5Hx58L		1		FM21-F600-DM01-SD2
1	SPADE DRILL BODY	ø46.7x555L		1		FM21-F600-DM01-SD1

WORK NO.	PROJECT: POSCO		SCALE: 1/2
REF. NO.	TITLE: DRILLING MACHINE ASSEMBLY / SPADE DRILL ASS'Y		PROJECTION: 3RD
DRAWN: S.D.KIM	CHECKED:	APPROVED:	DRAWING NO.: FM21-F600-DM01-SD
20.10.10			REV.: 0

에프엠글로벌(주) / FM GLOBAL CONSTRUCTION EQUIPMENT MACHINERY CO., LTD.

A2 : 594x420

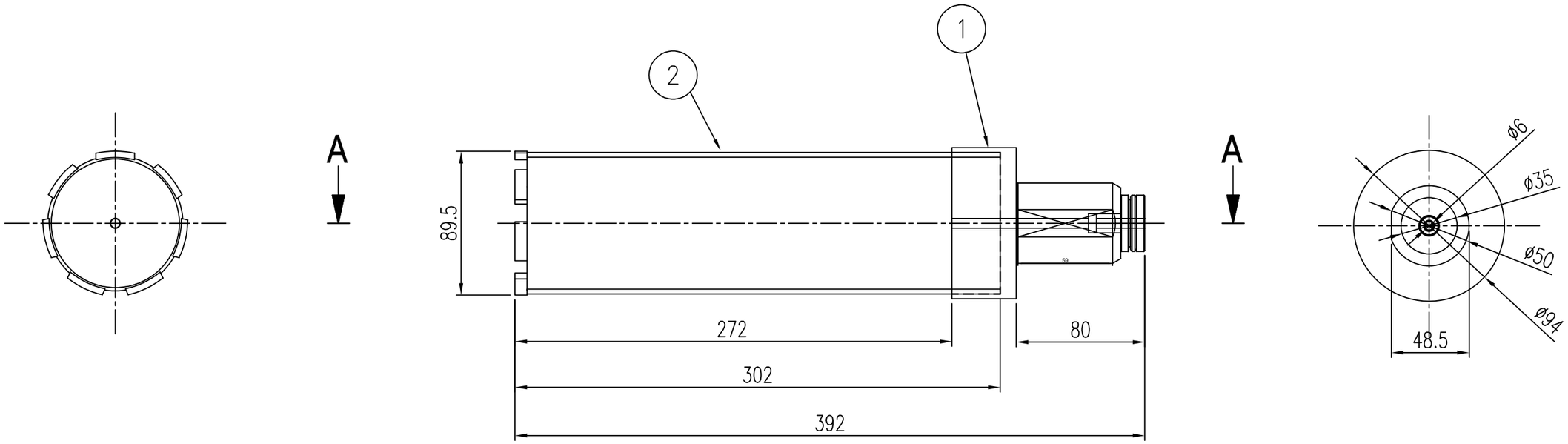

<주기>
1. 조립 후 찍힘 등 유해한 흠이 없을것.
2. ( )안의 치수는 참고 치수임

NO.	PARTS NAME	SIZE	MATERIAL	Q'TY	WT(KG)	REMARKS
2	CORE BIT	ø89.5x302L		1		FM21-F600-DM01-CD2
1	CORE DRILL BODY	ø94xø50x105L		1		FM21-F600-DM01-CD1

WORK NO.	PROJECT: POSCO		SCALE: 1/2
REF. NO.	TITLE: DRILLING MACHINE ASSEMBLY / CORE DRILL ASS'Y		PROJECTION: 3RD
DRAWN: S.D.KIM / 20.10.10	CHECKED:	APPROVED:	DRAWING NO.: FM21-F600-DM01-CD
			REV.: 0

에프엠글로벌(주) / FM GLOBAL CONSTRUCTION EQUIPMENT MACHINERY CO., LTD.

A2 : 594x420

NO.	DATE	REVISION DESCRIPTION	DRAWN	CHECKED	APP'D
0					

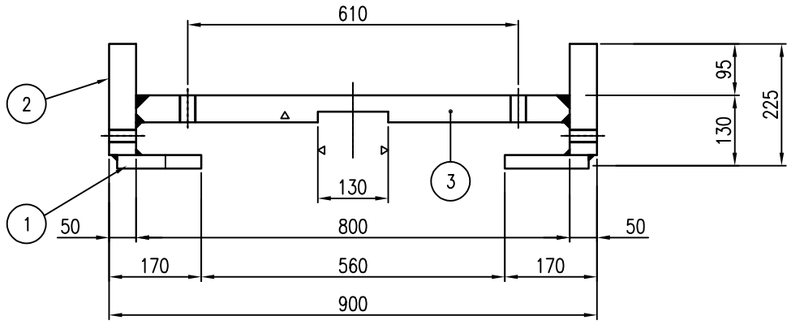

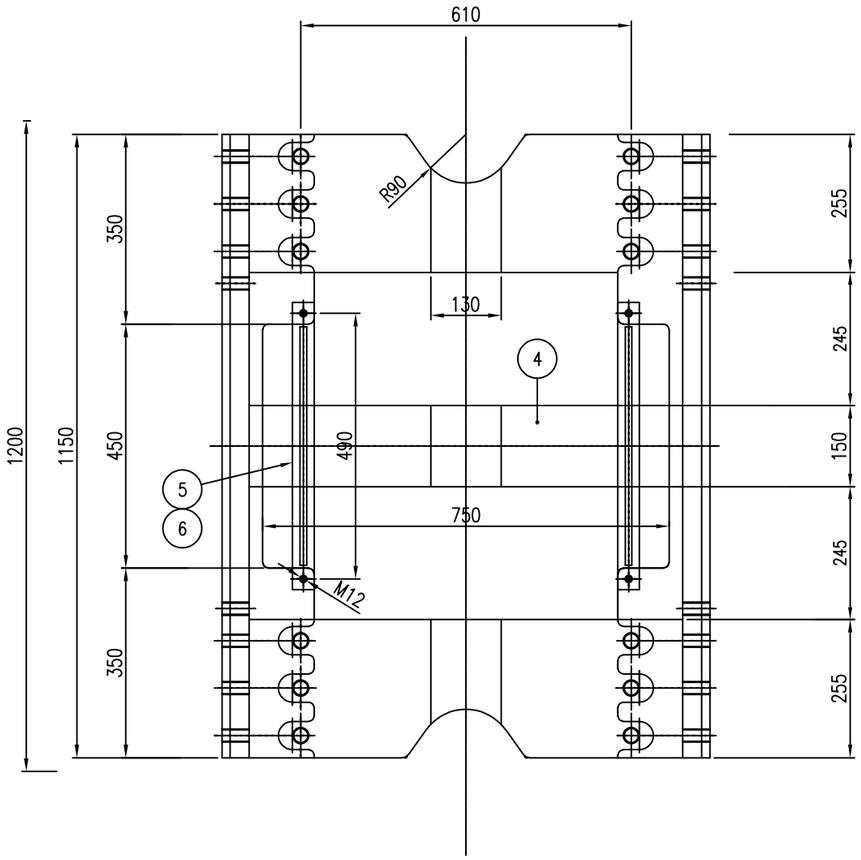

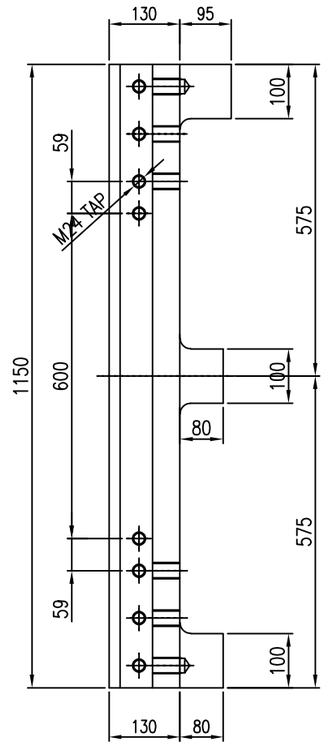

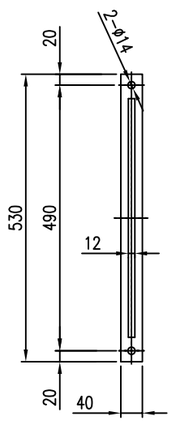

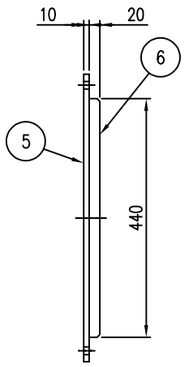

TOTAL WEIGHT = 339.7 KG

NO.	PARTS NAME	SIZE	MATERIAL	Q'TY	WT(KG)	REMARKS
6	PLATE	12tx20x440	SS400	2	1.6	
5	PLATE	10tx40x530	SS400	2	3.2	
4	PLATE	50tx150x800	SS400	1	45.8	
3	PLATE	50tx255x800	SS400	2	135.0	
2	PLATE	50tx205x1150	SS400	2	117.5	
1	PLATE	25tx155x1150	SS400	2	36.6	

WORK NO.			PROJECT	SCALE
REF. NO.			POSCO	1/8
DRAWN	CHECKED	APPROVED	TITLE: DRILLING MACHINE ASSEMBLY / BASE JIG	PROJECTION: 3RD
S.D.KIM			DRAWING NO. FM21-F600-DM-BG	REV. 0
20.10.10				

에프엠글로벌(주) / FM GLOBAL CONSTRUCTION EQUIPMENT MACHINERY CO., LTD.

A2 : 594x420

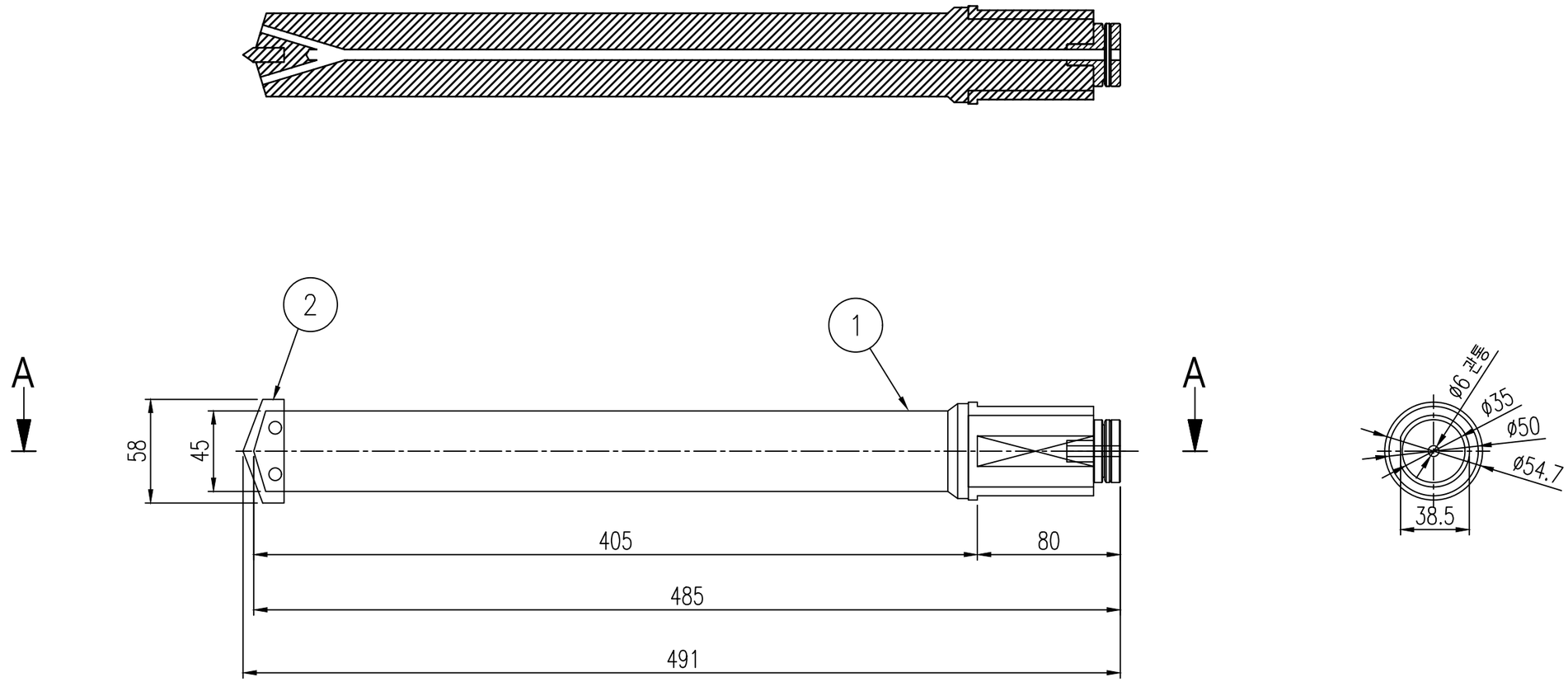

<주기>
1. 조립 후 찍힘 등 유해한 흠이 없을것.
2. ( )안의 치수는 참고 치수임

NO.	PARTS NAME	SIZE	MATERIAL	Q'TY	WT(KG)	REMARKS
2	SPADE INSERT TIP	8Tx23.5Hx58L		1		FM21-F600-DM01-SD-01-2
1	SPADE DRILL BODY	ø45x485L		1		FM21-F600-DM01-SD-01-1

WORK NO.	PROJECT: POSCO		SCALE: 1/2
REF. NO.	TITLE: DRILLING MACHINE ASSEMBLY / SPADE DRILL ASS'Y		PROJECTION: 3RD
DRAWN: S.D.KIM	CHECKED:	APPROVED:	DRAWING NO.: FM21-F600-DM01-SD-01
20.10.10			REV.: 0

에프엠글로벌(주) / FM GLOBAL CONSTRUCTION EQUIPMENT MACHINERY CO., LTD.

A2 : 594x420

NO.	DESCRIPTION	SPECIFICATION	MAT'L(KS)	QUANTITY		WEIGHT(kg)		REMARK
				UNIT	TOTAL	PERUNIT	TOTAL	
				EA	1			

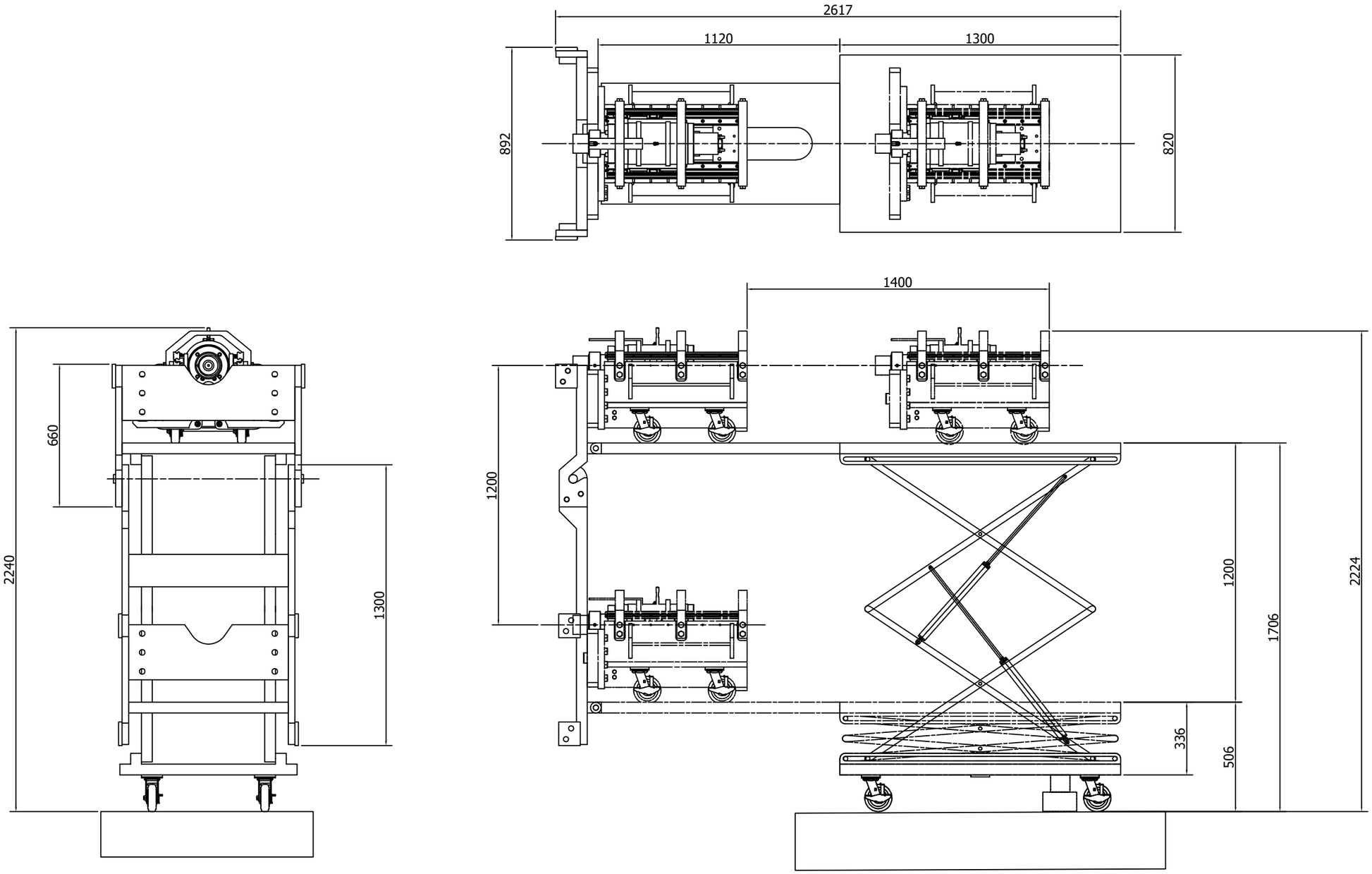

에프엠글로벌(주) / FM GLOBAL CONSTRUCTION EQUIPMENT MACHINERY CO., LTD.

Total q'ty SETS	TITLE 고로 천공 드릴 LAYOUT			
Total w.t				
Scale	CUSTOMER		DRAWING NO. FM21-F600-LY-01	
Date	Designed -	Checked	Approved	R 0

A1(594x841mm)

NO.	DESCRIPTION	SPECIFICATION	MAT'L(KS)	QUANTITY		WEIGHT(kg)		REMARK
				UNIT	TOTAL	PERUNIT	TOTAL	
				EA	1			

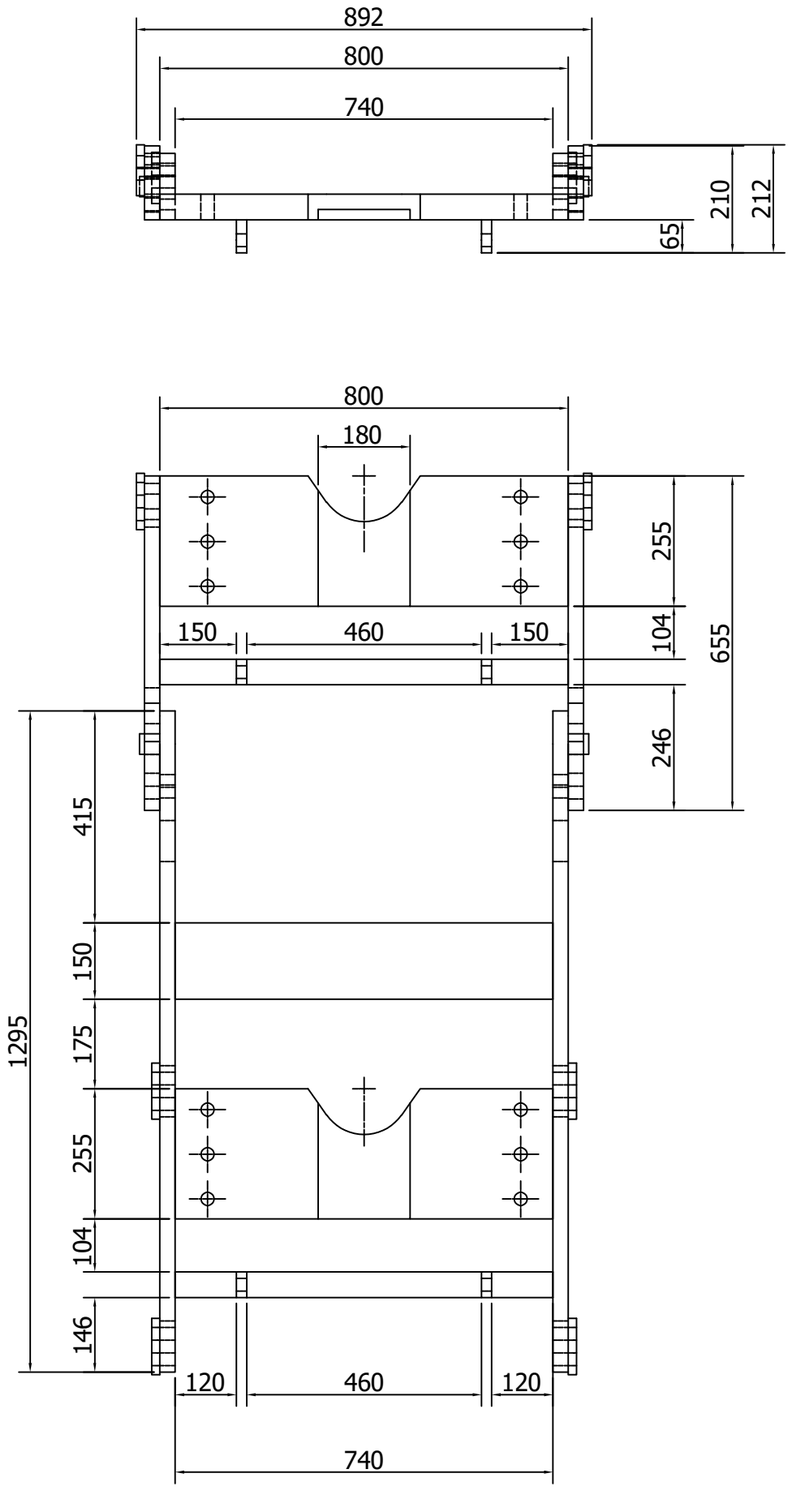

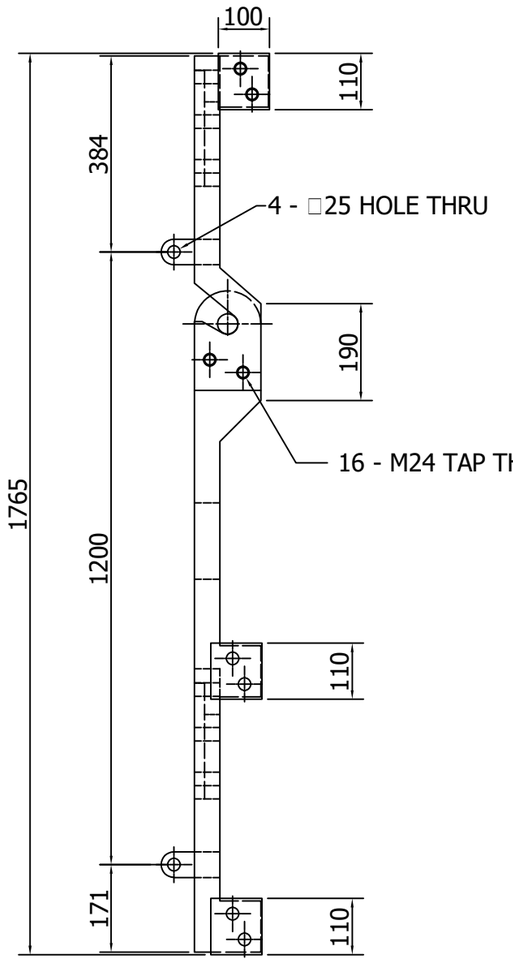

에프엠글로벌(주) / FM GLOBAL CONSTRUCTION EQUIPMENT MACHINERY CO., LTD.

Total q'ty SETS	TITLE 고로 천공 드릴 베이스지그 BASE JIG			
Total w.t				
Scale	CUSTOMER		DRAWING NO. FM21-F600-DM-BG-01	
Date	Designed -	Checked	Approved	R 0

A1(594x841mm)

NO.	DESCRIPTION	SPECIFICATION	MAT'L(KS)	QUANTITY		WEIGHT(kg)		REMARK
				UNIT	TOTAL	PERUNIT	TOTAL	
				EA	1			

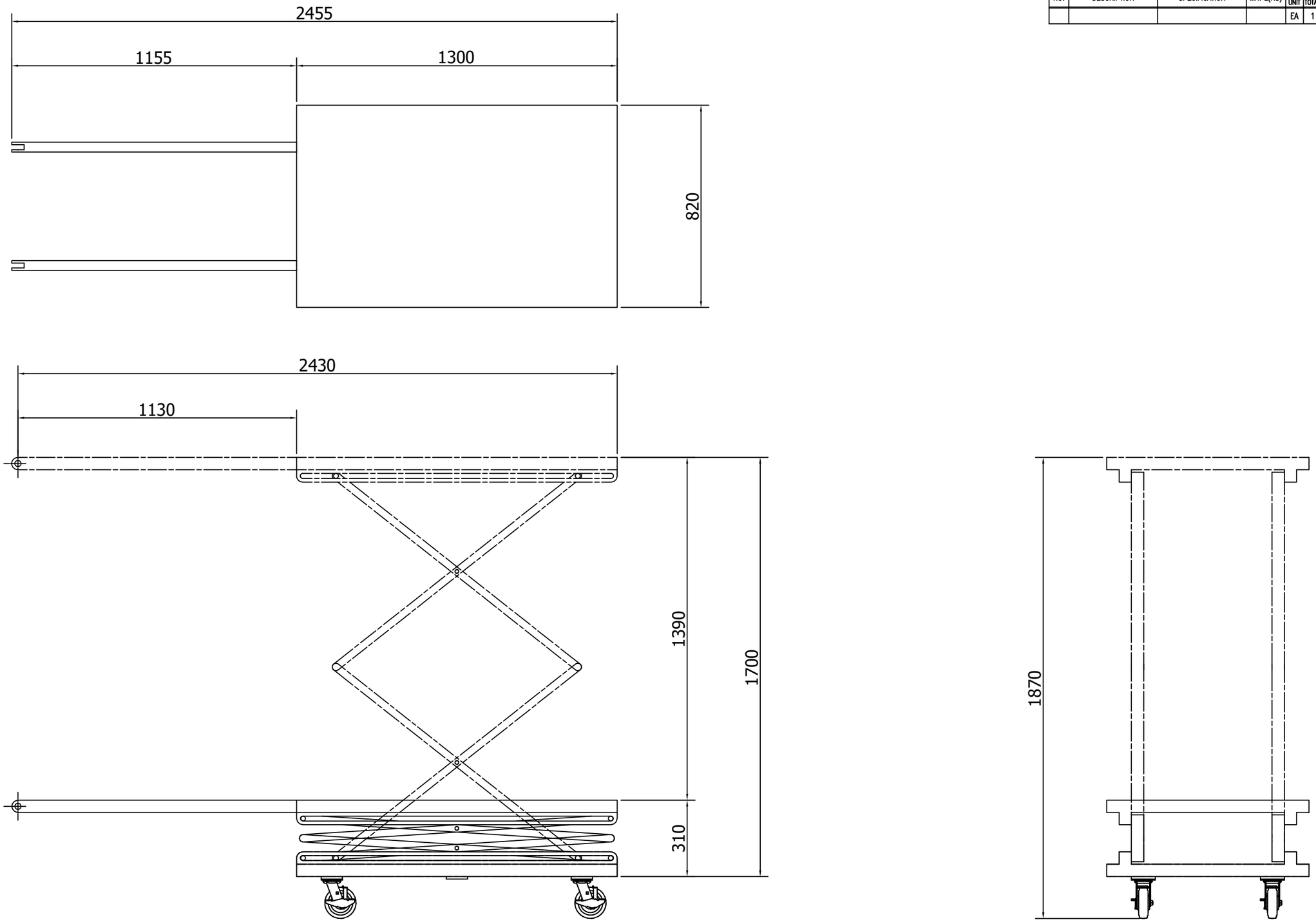

에프엠글로벌(주) / FM GLOBAL CONSTRUCTION EQUIPMENT MACHINERY CO., LTD.

Total q'ty SETS	TITLE 고로 천공 드릴 이동 대차 MOVING DECK			
Total w.t				
Scale	CUSTOMER		DRAWING NO. FM21-F600-MD-01	
Date	Designed -	Checked	Approved	Re 0

A1(594x841mm)